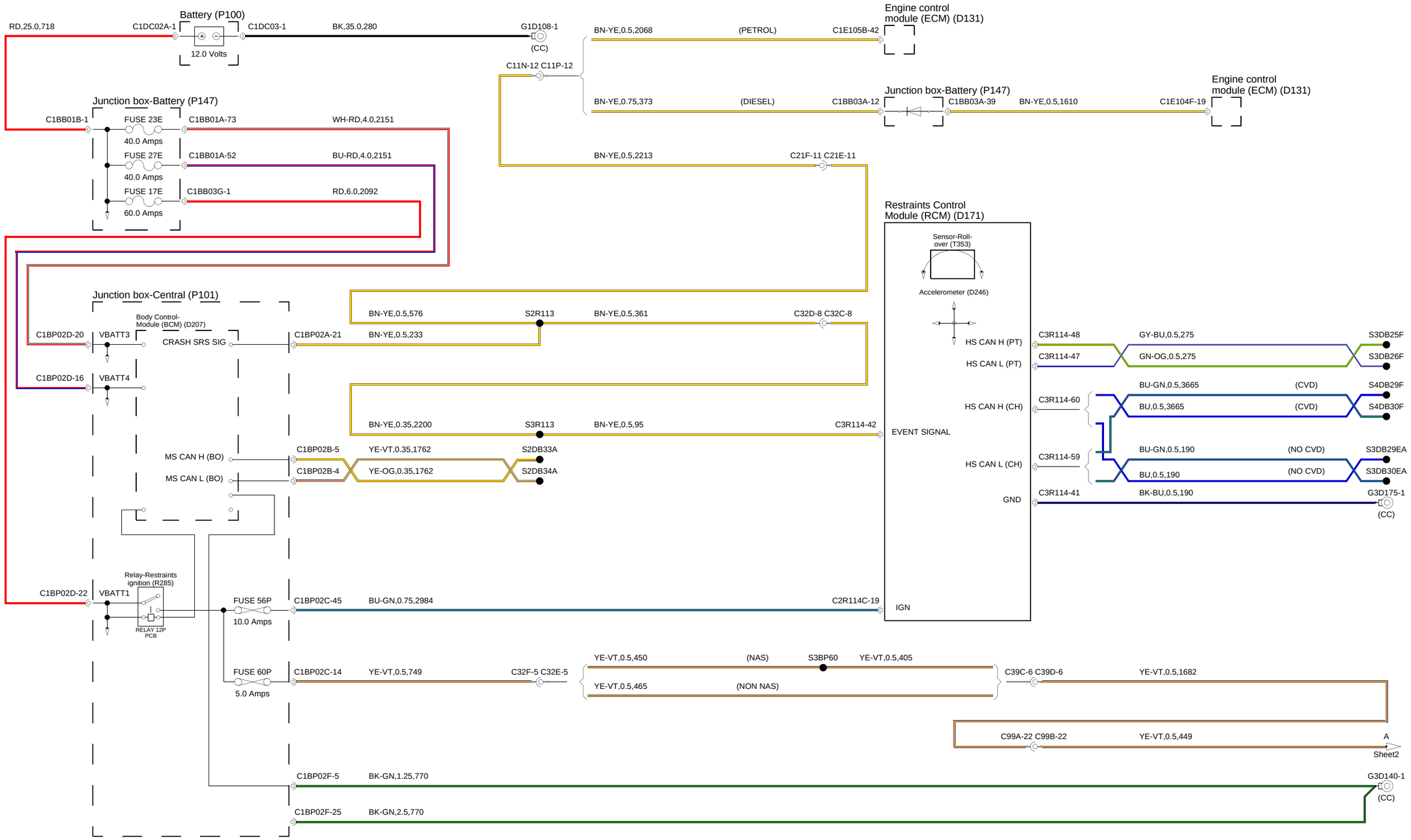
Battery (P100)
RD,25.0,718
C1DC02A-1
C1DC03-1
BK,35.0,280
G1D108-1
(CC)
12.0 Volts
Engine control module (ECM) (D131)
BN-YE,0.5,2068
(PETROL)
C1E105B-42
C11N-12 C11P-12
Junction box-Battery (P147)
BN-YE,0.75,373
(DIESEL)
C1BB03A-12
C1BB03A-39
BN-YE,0.5,1610
C1E104F-19
Engine control module (ECM) (D131)
Junction box-Battery (P147)
C1BB01B-1
FUSE 23E
40.0 Amps
C1BB01A-73
WH-RD,4.0,2151
FUSE 27E
40.0 Amps
C1BB01A-52
BU-RD,4.0,2151
FUSE 17E
60.0 Amps
C1BB03G-1
RD,6.0,2092
BN-YE,0.5,2213
C21F-11 C21E-11
Restraints Control Module (RCM) (D171)
Sensor-Roll-over (T353)
Accelerometer (D246)
Junction box-Central (P101)
Body Control-Module (BCM) (D207)
C1BP02D-20
VBATT3
CRASH SRS SIG
C1BP02A-21
BN-YE,0.5,233
BN-YE,0.5,576
S2R113
BN-YE,0.5,361
C32D-8 C32C-8
C1BP02D-16
VBATT4
HS CAN H (PT)
C3R114-48
GY-BU,0.5,275
S3DB25F
HS CAN L (PT)
C3R114-47
GN-OG,0.5,275
S3DB26F
HS CAN H (CH)
C3R114-60
BU-GN,0.5,3665
(CVD)
S4DB29F
BU,0.5,3665
(CVD)
S4DB30F
BN-YE,0.35,2200
S3R113
BN-YE,0.5,95
C3R114-42
EVENT SIGNAL
HS CAN L (CH)
C3R114-59
BU-GN,0.5,190
(NO CVD)
S3DB29EA
BU,0.5,190
(NO CVD)
S3DB30EA
MS CAN H (BO)
C1BP02B-5
YE-VT,0.35,1762
S2DB33A
MS CAN L (BO)
C1BP02B-4
YE-OG,0.35,1762
S2DB34A
GND
C3R114-41
BK-BU,0.5,190
G3D175-1
(CC)
Relay-Restraints ignition (R285)
C1BP02D-22
VBATT1
RELAY 12P PCB
FUSE 56P
10.0 Amps
C1BP02C-45
BU-GN,0.75,2984
C2R114C-19
IGN
FUSE 60P
5.0 Amps
C1BP02C-14
YE-VT,0.5,749
C32F-5 C32E-5
YE-VT,0.5,450
(NAS)
S3BP60
YE-VT,0.5,405
YE-VT,0.5,465
(NON NAS)
C39C-6 C39D-6
YE-VT,0.5,1682
C99A-22 C99B-22
YE-VT,0.5,449
A
Sheet2
C1BP02F-5
BK-GN,1.25,770
G3D140-1
(CC)
C1BP02F-25
BK-GN,2.5,770

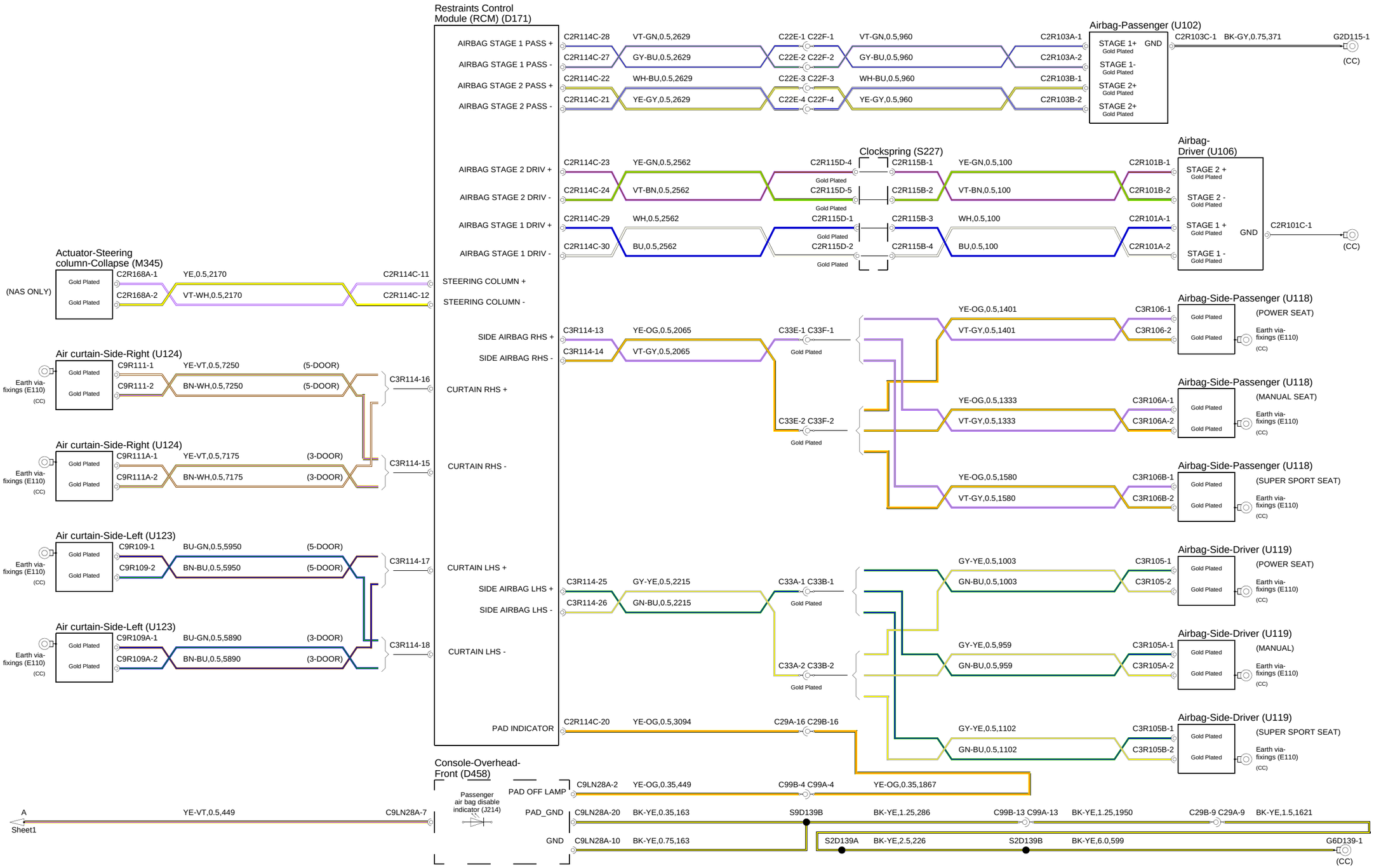
Restraints Control Module (RCM) (D171)
AIRBAG STAGE 1 PASS +
AIRBAG STAGE 1 PASS -
AIRBAG STAGE 2 PASS +
AIRBAG STAGE 2 PASS -
AIRBAG STAGE 2 DRIV +
AIRBAG STAGE 2 DRIV -
AIRBAG STAGE 1 DRIV +
AIRBAG STAGE 1 DRIV -
STEERING COLUMN +
STEERING COLUMN -
SIDE AIRBAG RHS +
SIDE AIRBAG RHS -
CURTAIN RHS +
CURTAIN RHS -
CURTAIN LHS +
SIDE AIRBAG LHS +
SIDE AIRBAG LHS -
CURTAIN LHS -
PAD INDICATOR
C2R114C-28 VT-GN,0.5,2629 C22E-1 C22F-1 VT-GN,0.5,960 C2R103A-1
C2R114C-27 GY-BU,0.5,2629 C22E-2 C22F-2 GY-BU,0.5,960 C2R103A-2
C2R114C-22 WH-BU,0.5,2629 C22E-3 C22F-3 WH-BU,0.5,960 C2R103B-1
C2R114C-21 YE-GY,0.5,2629 C22E-4 C22F-4 YE-GY,0.5,960 C2R103B-2
Airbag-Passenger (U102)
STAGE 1+ Gold Plated
GND
STAGE 1- Gold Plated
STAGE 2+ Gold Plated
STAGE 2+ Gold Plated
C2R103C-1 BK-GY,0.75,371 G2D115-1
(CC)
C2R114C-23 YE-GN,0.5,2562 C2R115D-4 C2R115B-1 YE-GN,0.5,100 C2R101B-1
C2R114C-24 VT-BN,0.5,2562 C2R115D-5 C2R115B-2 VT-BN,0.5,100 C2R101B-2
C2R114C-29 WH,0.5,2562 C2R115D-1 C2R115B-3 WH,0.5,100 C2R101A-1
C2R114C-30 BU,0.5,2562 C2R115D-2 C2R115B-4 BU,0.5,100 C2R101A-2
Gold Plated
Clockspring (S227)
Airbag-Driver (U106)
STAGE 2 + Gold Plated
STAGE 2 - Gold Plated
STAGE 1 + Gold Plated
STAGE 1 - Gold Plated
GND
C2R101C-1
(CC)
C3R114-13 YE-OG,0.5,2065 C33E-1 C33F-1
C3R114-14 VT-GY,0.5,2065
C33E-2 C33F-2
YE-OG,0.5,1401 C3R106-1
VT-GY,0.5,1401 C3R106-2
Airbag-Side-Passenger (U118)
(POWER SEAT)
Gold Plated
Earth via-fixings (E110)
(CC)
YE-OG,0.5,1333 C3R106A-1
VT-GY,0.5,1333 C3R106A-2
Airbag-Side-Passenger (U118)
(MANUAL SEAT)
YE-OG,0.5,1580 C3R106B-1
VT-GY,0.5,1580 C3R106B-2
Airbag-Side-Passenger (U118)
(SUPER SPORT SEAT)
C3R114-25 GY-YE,0.5,2215 C33A-1 C33B-1
C3R114-26 GN-BU,0.5,2215
C33A-2 C33B-2
GY-YE,0.5,1003 C3R105-1
GN-BU,0.5,1003 C3R105-2
Airbag-Side-Driver (U119)
(POWER SEAT)
GY-YE,0.5,959 C3R105A-1
GN-BU,0.5,959 C3R105A-2
Airbag-Side-Driver (U119)
(MANUAL)
C2R114C-20 YE-OG,0.5,3094 C29A-16 C29B-16
GY-YE,0.5,1102 C3R105B-1
GN-BU,0.5,1102 C3R105B-2
Airbag-Side-Driver (U119)
(SUPER SPORT SEAT)
Actuator-Steering column-Collapse (M345)
(NAS ONLY)
C2R168A-1 YE,0.5,2170 C2R114C-11
C2R168A-2 VT-WH,0.5,2170 C2R114C-12
Air curtain-Side-Right (U124)
Earth via-fixings (E110)
(CC)
C9R111-1 YE-VT,0.5,7250 (5-DOOR)
C9R111-2 BN-WH,0.5,7250 (5-DOOR)
C3R114-16
C9R111A-1 YE-VT,0.5,7175 (3-DOOR)
C9R111A-2 BN-WH,0.5,7175 (3-DOOR)
C3R114-15
Air curtain-Side-Left (U123)
C9R109-1 BU-GN,0.5,5950 (5-DOOR)
C9R109-2 BN-BU,0.5,5950 (5-DOOR)
C3R114-17
C9R109A-1 BU-GN,0.5,5890 (3-DOOR)
C9R109A-2 BN-BU,0.5,5890 (3-DOOR)
C3R114-18
Console-Overhead-Front (D458)
Passenger air bag disable indicator (J214)
PAD OFF LAMP
PAD_GND
GND
C9LN28A-2 YE-OG,0.35,449 C99B-4 C99A-4 YE-OG,0.35,1867
C9LN28A-20 BK-YE,0.35,163 S9D139B BK-YE,1.25,286 C99B-13 C99A-13 BK-YE,1.25,1950 C29B-9 C29A-9 BK-YE,1.5,1621
C9LN28A-10 BK-YE,0.75,163 S2D139A BK-YE,2.5,226 S2D139B BK-YE,6.0,599 G6D139-1
(CC)
A
Sheet1
YE-VT,0.5,449 C9LN28A-7

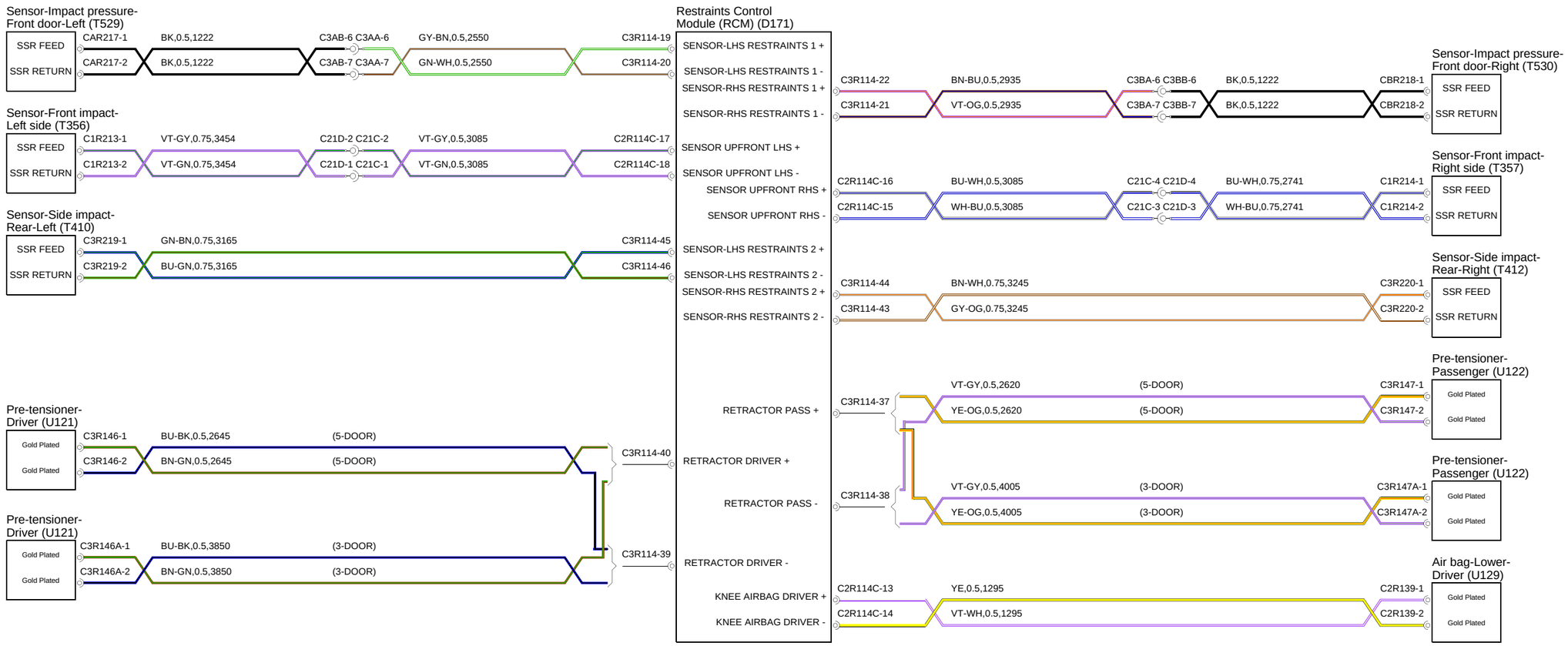
Sensor-Impact pressure-Front door-Left (T529)
SSR FEED
SSR RETURN
CAR217-1
CAR217-2
BK,0.5,1222
BK,0.5,1222
C3AB-6 C3AA-6
C3AB-7 C3AA-7
GY-BN,0.5,2550
GN-WH,0.5,2550
C3R114-19
C3R114-20
Sensor-Front impact-Left side (T356)
C1R213-1
C1R213-2
VT-GY,0.75,3454
VT-GN,0.75,3454
C21D-2 C21C-2
C21D-1 C21C-1
VT-GY,0.5,3085
VT-GN,0.5,3085
C2R114C-17
C2R114C-18
Sensor-Side impact-Rear-Left (T410)
C3R219-1
C3R219-2
GN-BN,0.75,3165
BU-GN,0.75,3165
C3R114-45
C3R114-46
Pre-tensioner-Driver (U121)
Gold Plated
C3R146-1
C3R146-2
BU-BK,0.5,2645
BN-GN,0.5,2645
(5-DOOR)
C3R114-40
Pre-tensioner-Driver (U121)
C3R146A-1
C3R146A-2
BU-BK,0.5,3850
BN-GN,0.5,3850
(3-DOOR)
C3R114-39
Restraints Control Module (RCM) (D171)
SENSOR-LHS RESTRAINTS 1 +
SENSOR-LHS RESTRAINTS 1 -
SENSOR-RHS RESTRAINTS 1 +
SENSOR-RHS RESTRAINTS 1 -
SENSOR UPFRONT LHS +
SENSOR UPFRONT LHS -
SENSOR UPFRONT RHS +
SENSOR UPFRONT RHS -
SENSOR-LHS RESTRAINTS 2 +
SENSOR-LHS RESTRAINTS 2 -
SENSOR-RHS RESTRAINTS 2 +
SENSOR-RHS RESTRAINTS 2 -
RETRACTOR PASS +
RETRACTOR DRIVER +
RETRACTOR PASS -
RETRACTOR DRIVER -
KNEE AIRBAG DRIVER +
KNEE AIRBAG DRIVER -
C3R114-22
C3R114-21
BN-BU,0.5,2935
VT-OG,0.5,2935
C3BA-6 C3BB-6
C3BA-7 C3BB-7
BK,0.5,1222
BK,0.5,1222
CBR218-1
CBR218-2
Sensor-Impact pressure-Front door-Right (T530)
SSR FEED
SSR RETURN
C2R114C-16
C2R114C-15
BU-WH,0.5,3085
WH-BU,0.5,3085
C21C-4 C21D-4
C21C-3 C21D-3
BU-WH,0.75,2741
WH-BU,0.75,2741
C1R214-1
C1R214-2
Sensor-Front impact-Right side (T357)
SSR FEED
SSR RETURN
C3R114-44
C3R114-43
BN-WH,0.75,3245
GY-OG,0.75,3245
C3R220-1
C3R220-2
Sensor-Side impact-Rear-Right (T412)
SSR FEED
SSR RETURN
C3R114-37
VT-GY,0.5,2620
YE-OG,0.5,2620
(5-DOOR)
(5-DOOR)
C3R147-1
C3R147-2
Pre-tensioner-Passenger (U122)
Gold Plated
C3R114-38
VT-GY,0.5,4005
YE-OG,0.5,4005
(3-DOOR)
(3-DOOR)
C3R147A-1
C3R147A-2
Pre-tensioner-Passenger (U122)
Gold Plated
C2R114C-13
C2R114C-14
YE,0.5,1295
VT-WH,0.5,1295
C2R139-1
C2R139-2
Air bag-Lower-Driver (U129)
Gold Plated

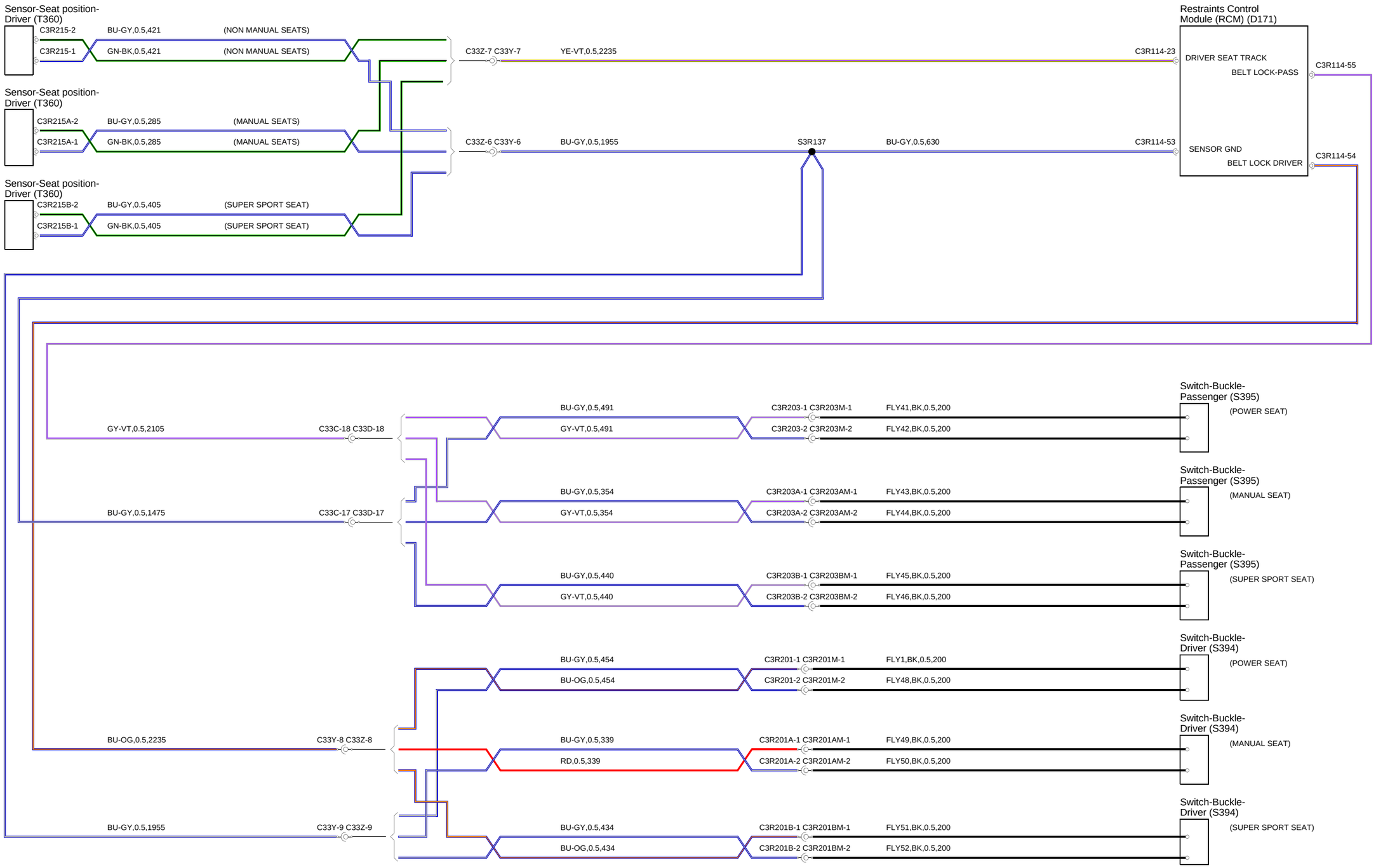
Sensor-Seat position-Driver (T360)
C3R215-2
C3R215-1
BU-GY,0.5,421
GN-BK,0.5,421
(NON MANUAL SEATS)
(NON MANUAL SEATS)
Sensor-Seat position-Driver (T360)
C3R215A-2
C3R215A-1
BU-GY,0.5,285
GN-BK,0.5,285
(MANUAL SEATS)
(MANUAL SEATS)
Sensor-Seat position-Driver (T360)
C3R215B-2
C3R215B-1
BU-GY,0.5,405
GN-BK,0.5,405
(SUPER SPORT SEAT)
(SUPER SPORT SEAT)
C33Z-7 C33Y-7
YE-VT,0.5,2235
C3R114-23
C33Z-6 C33Y-6
BU-GY,0.5,1955
S3R137
BU-GY,0.5,630
C3R114-53
Restraints Control Module (RCM) (D171)
DRIVER SEAT TRACK
BELT LOCK-PASS
SENSOR GND
BELT LOCK DRIVER
C3R114-55
C3R114-54
GY-VT,0.5,2105
C33C-18 C33D-18
BU-GY,0.5,1475
C33C-17 C33D-17
BU-GY,0.5,491
GY-VT,0.5,491
C3R203-1 C3R203M-1
C3R203-2 C3R203M-2
FLY41,BK,0.5,200
FLY42,BK,0.5,200
Switch-Buckle-Passenger (S395)
(POWER SEAT)
BU-GY,0.5,354
GY-VT,0.5,354
C3R203A-1 C3R203AM-1
C3R203A-2 C3R203AM-2
FLY43,BK,0.5,200
FLY44,BK,0.5,200
Switch-Buckle-Passenger (S395)
(MANUAL SEAT)
BU-GY,0.5,440
GY-VT,0.5,440
C3R203B-1 C3R203BM-1
C3R203B-2 C3R203BM-2
FLY45,BK,0.5,200
FLY46,BK,0.5,200
Switch-Buckle-Passenger (S395)
(SUPER SPORT SEAT)
BU-GY,0.5,454
BU-OG,0.5,454
C3R201-1 C3R201M-1
C3R201-2 C3R201M-2
FLY1,BK,0.5,200
FLY48,BK,0.5,200
Switch-Buckle-Driver (S394)
(POWER SEAT)
BU-OG,0.5,2235
C33Y-8 C33Z-8
BU-GY,0.5,339
RD,0.5,339
C3R201A-1 C3R201AM-1
C3R201A-2 C3R201AM-2
FLY49,BK,0.5,200
FLY50,BK,0.5,200
Switch-Buckle-Driver (S394)
(MANUAL SEAT)
BU-GY,0.5,1955
C33Y-9 C33Z-9
BU-GY,0.5,434
BU-OG,0.5,434
C3R201B-1 C3R201BM-1
C3R201B-2 C3R201BM-2
FLY51,BK,0.5,200
FLY52,BK,0.5,200
Switch-Buckle-Driver (S394)
(SUPER SPORT SEAT)

Published by Jaguar Land Rover Limited
Publication Part No. JLR 20 06 21_1E